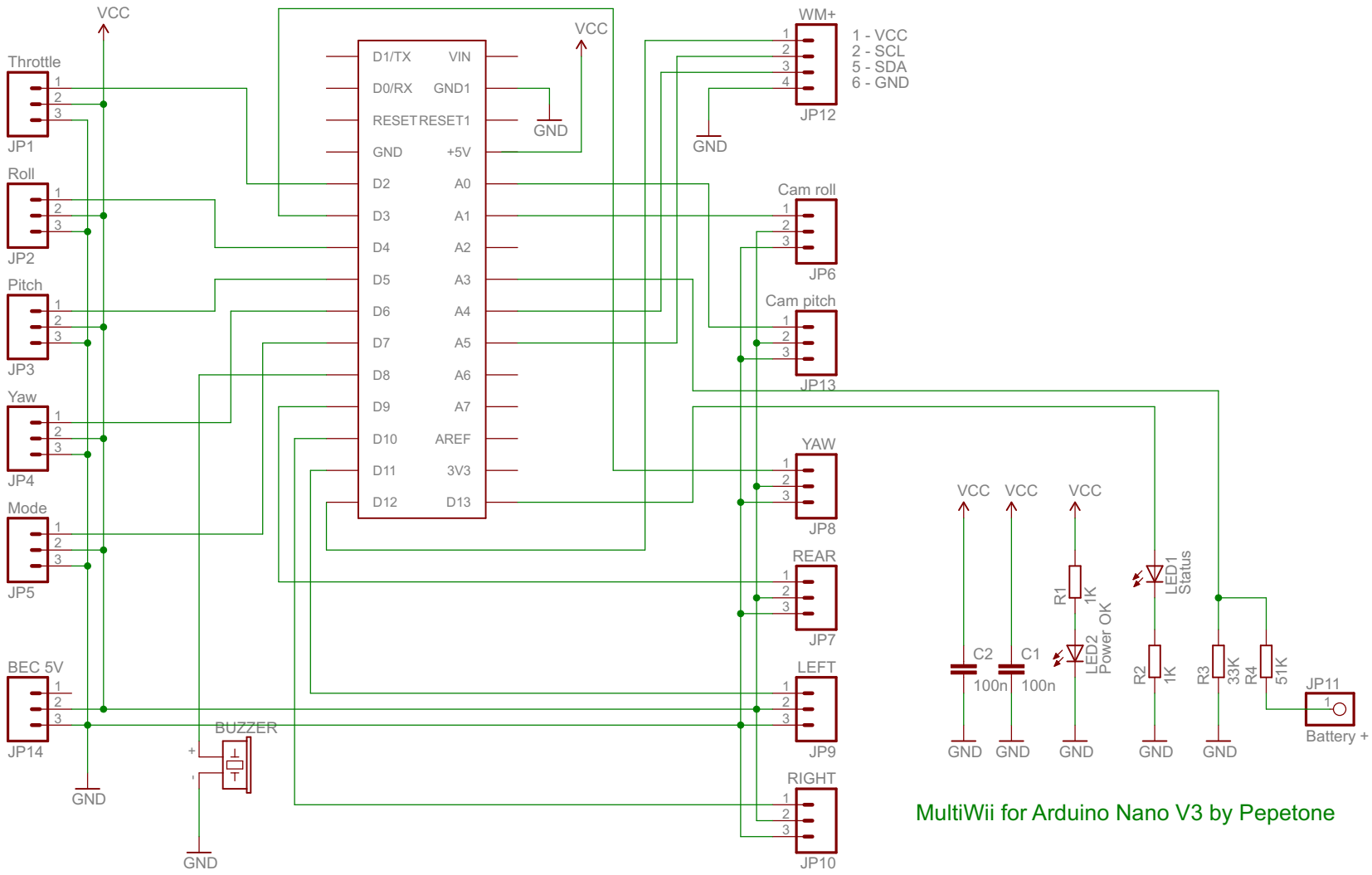

MultiWii for Arduino Nano V3 by Pepetone